Rev	Date	Description
A	1/31/11	Release for Production
B	5/28/12	Rev Cartridge for Injection Molding
C	1/19/15	Add Backflow Prevention Gate
D	6/3/16	Add One Way Check Valve

Note	Item/Pg	NOTES		Product Number
One-Way Check Valve Bulkhead Assembly			ASTM A36 Powder Coated Blk	JF4PCCV
			316 Stainless Steel	JF4SSCV
1	001/2	Bulkhead Plate		Included in Assembly
2	002/2	Bulkhead Plate Cap Washer		
3	003/2	Bulkhead Plate Cage		
One-Way Valve Filter Cartridge Assembly			UV Protected ABS	JF4CVFC
4	004/3	Standard Face Plate Cap		Included in Assembly
5	005/4	Outer Cartridge Core		
6	006/5	Inner Filter Media		
7	007/4	Inner Cartridge Core		
8	008/6	Bulkhead Wall Gasket		
9	009/6	Back Flow Gate		
10	010/6	Back Flow Gate Hinge		
11	011/7	One Way Valve		
12	012/7	One Way Valve Plug		

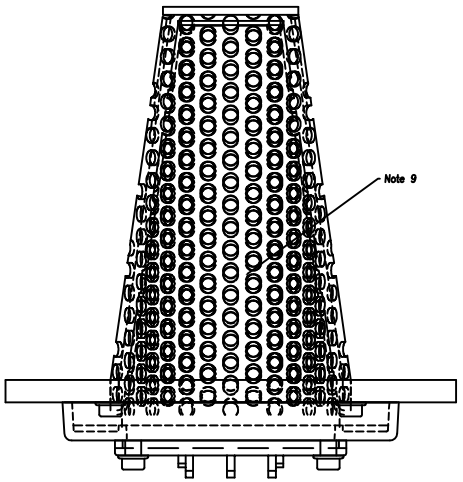

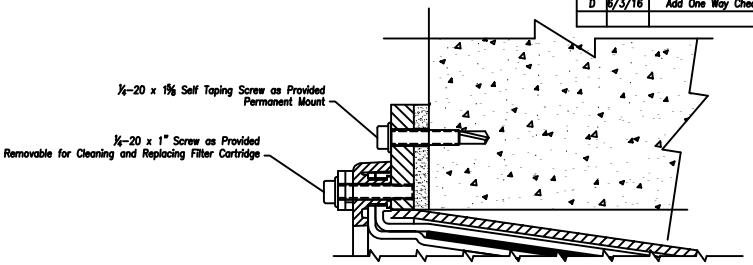

Recommended Bulkhead & Filter Assembly Mounting

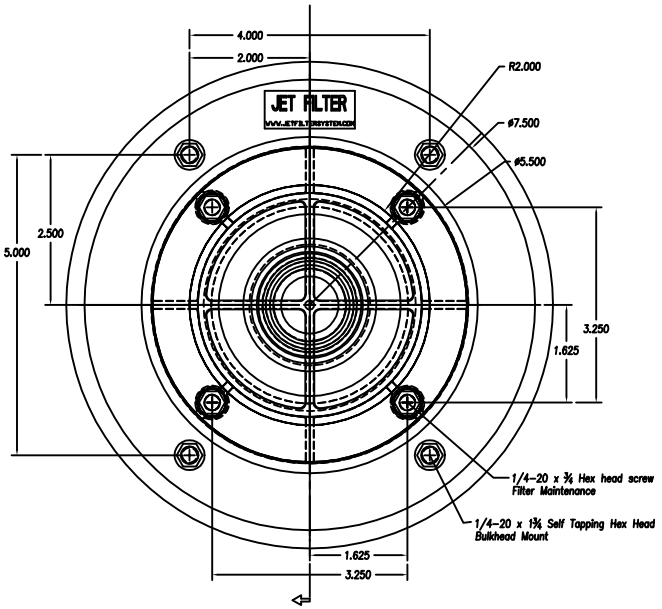

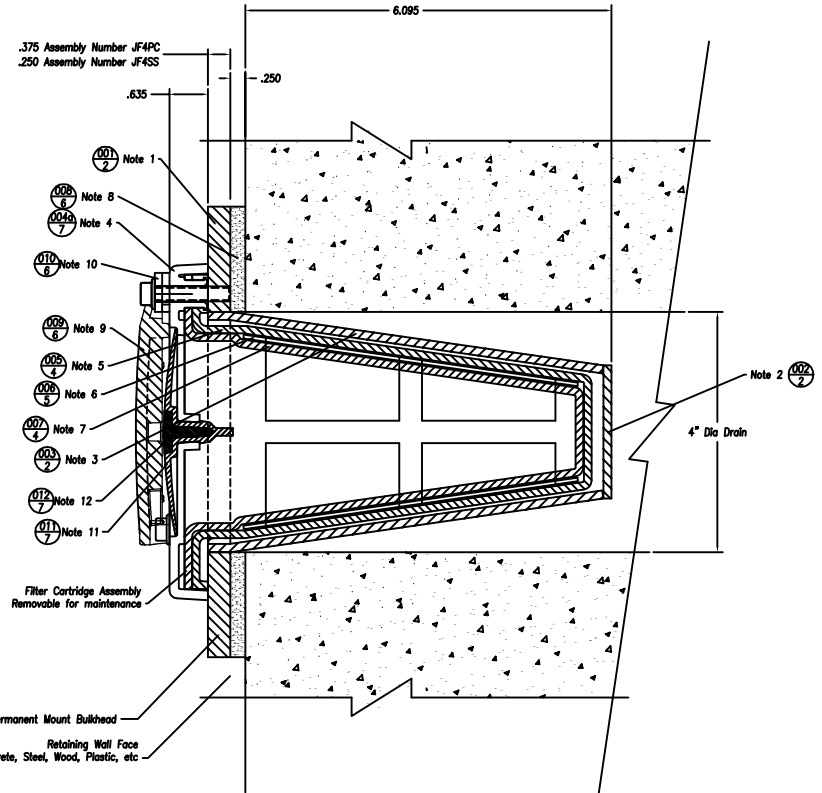

THIRD ANGLE PROJECTION
BREAK ALL UNNECESSARY SHARP EDGES

Jet Filter System
info@jetfiltersystem.com
14 N. Central Ave.
Casey, Illinois
800 475-2029

TOLERANCES UNLESS OTHERWISE SPECIFIED			
2 PLACE	3 PLACE	4 PLACE	ANGLES
±.010	±.005	±.001	±.1°

DEVIATIONS FROM INTENDED SHAPE (FLATNESS, ROUNDNESS, SQUARENESS, ETC.) MUST BE WITHIN STATED DIMENSIONAL TOLERANCES

CUSTOMER			
DESCRIPTION	4 Inch Jet Filter Assembly		
PAGE DESCRIPTION	One-Way Check Valve Filter Assembly		
MATERIAL	SURFACE	SCALE 1=1	REV. B
DRAWN BY ADK	CHECKED BY ADK	DWG NO. JF4PCCV/JF4SSCV	PAGE 1 NO.
DATE 7-19-2016	SHEET 1 OF SHTS.		
DETAIL NO.			